THIS DRAWING IS UNPUBLISHED. RELEASED FOR PUBLICATION ,1998 .
© COPYRIGHT 1998 BY AMP INCORPORATED.ALL RIGHTS RESERVED.

LOC J DIST

REVISIONS 変更

P	LTR	DESCRIPTION	ECN	DATE	DWN	APVD
	0	RELEASED	FJ00-1421-98	7/DEC '98	K.I	I.H
	A	REVISED	FJ00-1080-00	2/SEP '00	Y.K	S.M
	B	REVISED	FJD0-0039-03	2/JUN '03	T.S	S.M

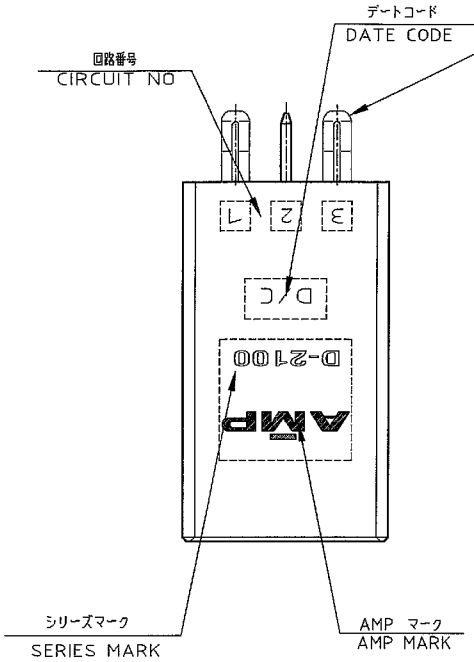

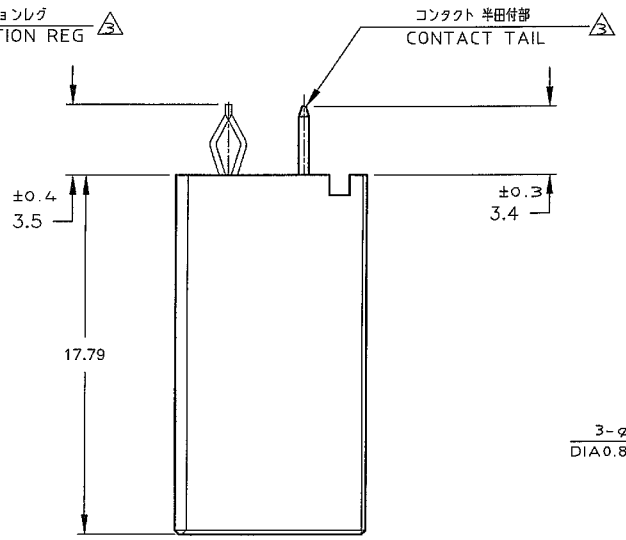

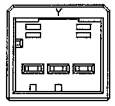

1318123-2
(KEYING Y)
SCALE:2-1

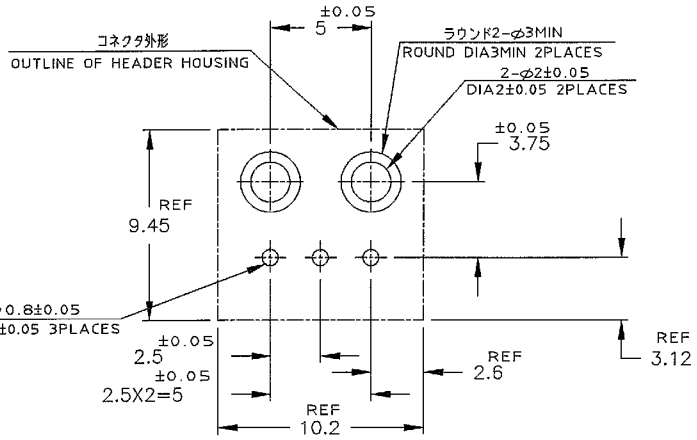

推奨基板取付け穴寸法 (公差:±0.05)
PC 基板厚:1.6±0.3
(コネクタ搭載面)

RECOMENDED PC BOARD HOLE PATTERN(TOL:±0.05)
PC BOARD THICKNESS:1.6±0.3
(CONNECTOR MOUNT SIDE)

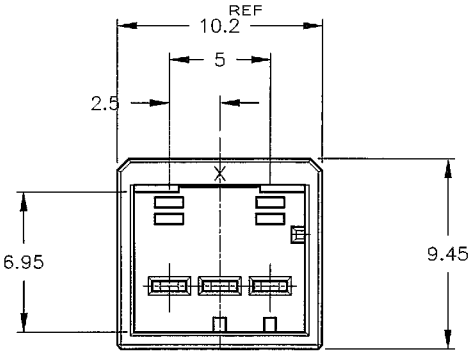

1318123-1
(KEYING X)

NOTES

1. MATERIAL:HOUSING:GLASS FILED THERMO PLASTIC ,POLYESTER(94V-0),COLOR:BLACK
TAB CONTACT:COPPER ALLOY
RETENTION LEG:BRASS

2. FINISH(CONTACT AREA):0.38μmMIN GOLD PLATING OVER Ni PLATING

3. FINISH(RETENTION LEG): TIN PLATED (CONTACT TAIL) OVER NICKEL

注 記

1. 材料: ハウジング: ガラス入り熱可塑性 ポリエステル樹脂 (94V-0),色: 黒
タブ コンタクト:銅合金
リテンション レグ:黄銅

2. めっき: コンタクト: 全面Ni下地 接触部:0.38μm MIN金めっき

3. めっき: リテンションレグとコンタクト半田付部 : ニッケル下地の上にスズめっき

THIS DRAWING IS A CONTROLLED DOCUMENT FOR AMP INCORPORATED. IT IS SUBJECT TO CHANGE AND THE CONTROLLING ENGINEERING ORGANIZATION SHOULD BE CONTACTED FOR THE LATEST REVISION.

DIMENSIONS: 単位 特: mm

TOLERANCES UNLESS OTHERWISE SPECIFIED: 一般公差
1桁 : ±0.3
3桁 >10 : ±0.35
10桁 >30 : ±0.4
ANGLE : ±3°

MATERIAL 材料: 注記参照 SEE NOTES

FINISH 仕上: 注記参照 SEE NOTES

DWN K.IKEDA 7/DEC/'98
CHK N.MATSUBARA 7/DEC/'98
APVD I.HASEGAWA 7/DEC/'98
PRODUCT SPEC 製品規格 108-5619
APPLICATION SPEC 取付適用規格 114-5258
WEIGHT T1

tyco Electronics
Tyco Electronics AMP K.K.
Kawasaki,Japan

NAME 名称: 1列 ヘッダーアセンブリー 3P
<垂直タイプ>
SINGLE ROW HEADER ASS'Y 3P ("V"TYPE)
<DYNAMIC D-2100D>

SIZE	CAGE CODE	DRAWING NO 番号	RESTRICTED TO
A3	00779	C-1318123	—

CUSTOMER DRAWING SCALE 尺度 4-1 SHEET 1 OF 1 REV B

AMP1470-19 REV 10/93

(CUSTOMER DRAWING) 顧 客 用 図 面